BERIC DAVIS COMPANIES INTERNATIONAL, LTD.

Connecting Business Worldwide!

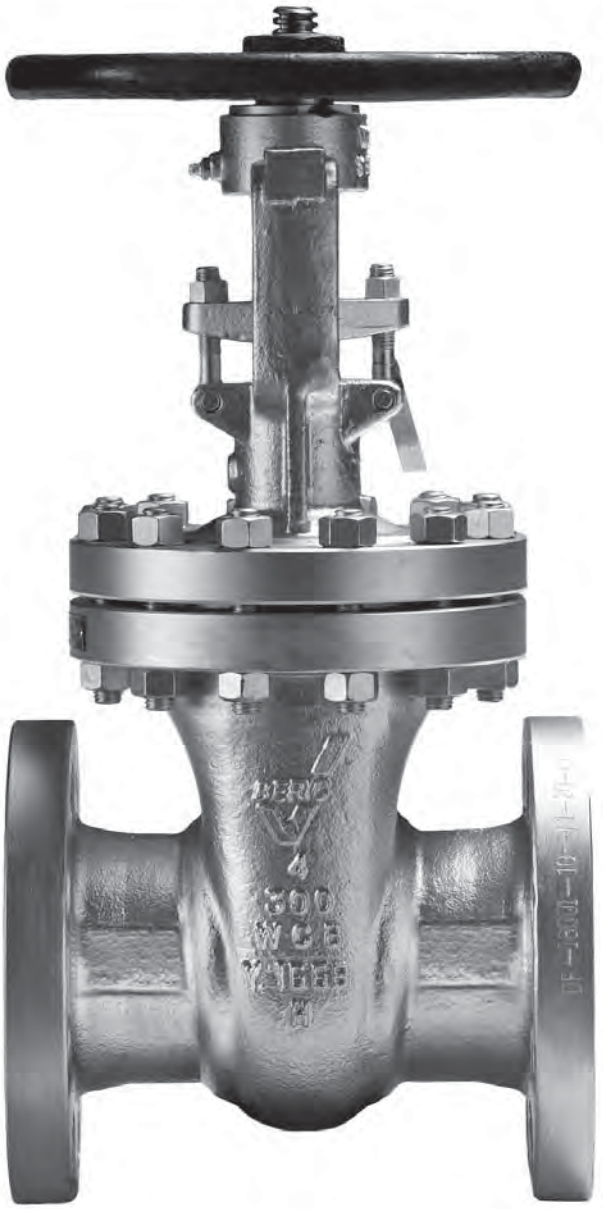

CAST CARBON STEEL

GATE, GLOBE, AND CHECK VALVE TECHNICAL DATA

WWW.BERICVALVES.COM

GATE VALVE:

API-600
ANSI Class: 150 - 2500 Size: 2" - 36"
For information on sizes larger than the ones shown on the cut sheets, please contact Beric -Davis.
Material & Specification:
ASTM A216 WCB
Outside Yoke and Bushing
Bolted Bonnet
Flex Wedge
Welded Seats 13Chrome Hard Faced with CoCr-A (API No.8)
Hand Wheel Operated

BERIC®
Genuine

OTHER SPECIFICATIONS AVAILABLE:
Materials: WCB, WC6, WC9, C5, C12, LCB, LCC, CF8M, CF3, CF3M, CN7M, and other High Temperature Alloys
End Connections: Butt Weld, Raised Face, Ring Type Joint
Seats: Removable or Welded
Packing: Standard - Flexible Graphite & Braided
Standard Trim: Trim 5, 8, 11, 12

Copyright 2015

Gate Valve
Class 150

Standards:
Face to Face Dimensions: ASME B16.10
End Flange Dimensions: ASME B16.5
26" ≥MSS SP-44
Or ASME B16.47
Basic Design: API 600
Test Standard: API 598

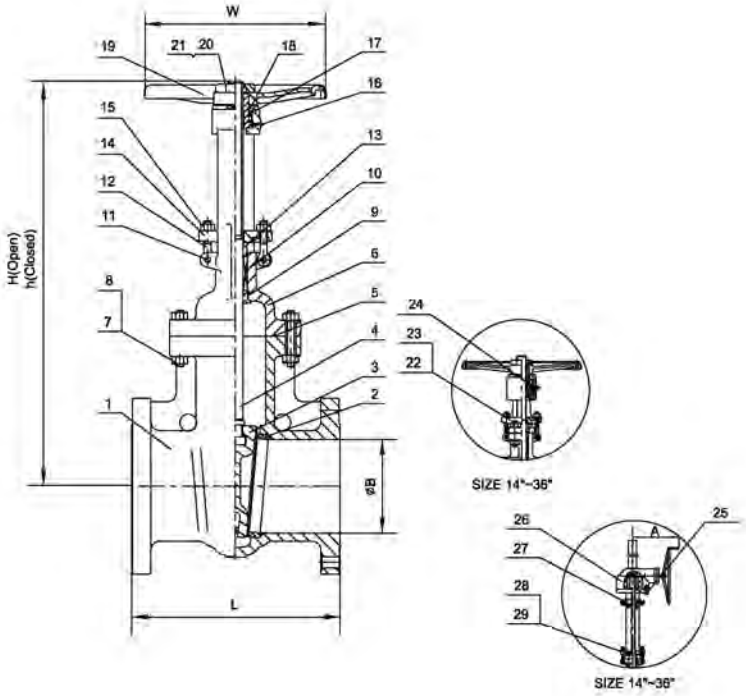

MATERIAL LIST						
NO.	Part Name	ASTM Specification (Specs – Grades/Types)				
		A 216	A 352	A 217		A 351
		WCB	LCC	WC6	C5	CF8M
1	Body	A 216-WCB	A 352-LCC	A217-WC6	A 217-C5	A 351-CF8M
2	Seat Ring	A 105, LF2, 316, or 304				
	Seat Ring Surface	13CR, HF (CoCr-A), 316, 304, or Monel				
3	Gate	A 216 – WCB	A 352-LCC	A217-WC6	A 217-C5	A 351-CF8M
	Gate Seating Surface	13CR, HF (CoCr-A), 316, 304, or Monel				
4	Stem	13CR, 316, 304, 17-4PH, or Monel				
5	Gasket	Graphite Corrugated Stainless Steel				
6	Bonnet	A 216 – WCB	A 352-LCC	A217-WC6	A 217-C5	A 351-CF8M
7	Bonnet Bolt Nut	A 194-2H	A 194-4	A 194-2H	A 194-4	A 194-8
8	Bonnet Bolt	A 193-B7	A 320-L7	A 193-B7	A 193-B16	A 193-B8
9	Bonnet Bushing	13CR, 316, or 304				
10	Packing	Braided Graphite & Die Formed Graphite Ring				
11	Eye Bolt Pins	Carbon Steel				A 276 Type 316
12	Gland Eye Bolts	A 193-B7	A 320-L7	A 193-B7		A 193-B8
13	Gland	13CR, 316, or 304				
14	Gland Flange	A 216 – WCB	A 352-LCC	A217-WC6	A 217-C5	A 351-CF8M
15	Eye Bolt Nut	A 194-2H	A 194-7M	A 194-2H		A 194-8
16	Grease Nipple	Carbon Steel				A 276 Type 316
17	Yoke Sleeve	A 439 Gr. D2C				
18	Retaining Nut	Carbon Steel				A 276 Type 316
19	Handwheel	Malleable Iron				
20	Handwheel Nut	Carbon Steel				A 276 Type 316
21	Screw	Carbon Steel				
22	Yoke Pad Bolts	A 193-B7				A 276 Type 316
23	Yoke Pad Bolt Nuts	A 194-2H				A 276 Type 316
24	Bearing	Carbon Steel				
25	Stud	Carbon Steel				
26	Gear	Carbon Steel				
27	Yoke	A 216 – WCB	A 352-LCC	A217-WC6	A 217-C5	A 351-CF8M
28	Yoke Pad Bolt	A 193-B7	A 320-L7	A 193-B7	A 193-B16	A 193-B8
29	Yoke Pad Bolt Nuts	A 194-2H	A 194-4	A 194-2H	A 194-4	A 194-8

DIMENSIONS AND WEIGHTS																				
Size	NPS	2	2-1/2	3	4	5	6	8	10	12	14	16	18	20	24	26	28	30	32	36
L (RF)	In	7.00	7.50	8.00	9.00	10.00	10.50	11.50	13.00	14.00	15.00	16.00	17.00	18.00	20.00	22.00	24.00	24.00	26.00	28.00
	Mm	178	190	203	229	254	267	292	330	356	381	406	432	457	508	559	610	610	660	711
L (RTJ)	In	7.50	8.00	8.50	9.50	10.50	11.00	12.00	13.50	14.50	15.50	16.50	17.50	18.50	20.50	22.50	24.50	24.50	26.50	28.50
	Mm	191	203	216	241	267	279	305	343	368	394	419	445	470	521	572	622	622	673	724
L (BW)	In	8.50	9.50	11.12	12.00	15.00	15.88	16.50	18.00	19.75	22.50	24.00	26.00	28.00	32.00	34.00	36.00	36.00	38.00	40.00
	Mm	216	241	283	305	381	403	419	457	502	572	610	660	711	813	864	914	914	965	1016
A	In										14.17	14.17	14.17	16.18	16.18	23.62	23.62	23.62	23.62	23.62
	Mm										360	360	360	411	411	600	600	600	600	600
B	In	2	3	3	4	5	6	8	10	12	13	15	17	19	23	25	27	29	31	34.5
	Mm	51	64	76	102	127	152	203	254	305	337	387	483	489	591	643	692	743	781	876
h	In	13	14	16	18	21	24	29	35	41	46	54	60	67	79	94	102	111	113	118
	Mm	328	361	412	469	534	599	746	882	1052	1173	1362	1530	1698	2018	2387	2590	2819	2870	2997
H	In	15.28	17.48	19.57	23.03	26.65	30.12	37.95	45.47	53.62	60.43	71.30	79.09	87.80	103.98	121.50	130.98	141.97	145.98	154.49
	Mm	388	444	497	585	677	765	964	1155	1362	1535	1811	2009	2230	2641	3086	3327	3606	3708	3924
W	In	8	10	10	10	12	12	14	16	18	20	22	25	25	28	34	34	34	35	35
	Mm	200	250	250	250	300	300	350	400	450	500	560	640	640	720	860	860	860	900	900
WT	KG	18	28	34	52	64	78	122	180	255	383	505	647	792	1134	1699	2010	2380	3100	3950
	LB	40	62	75	115	141	172	269	397	562	844	1114	1426	1746	2500	3746	4431	5247	6834	8708

Copyright 2015

Gate Valve
Class 300

Standards:
Face to Face Dimensions: ASME B16.10
End Flange Dimensions: ASME B16.5
26" ≥MSS SP-44
Or ASME B16.47
Basic Design: API 600
Test Standard: API 598

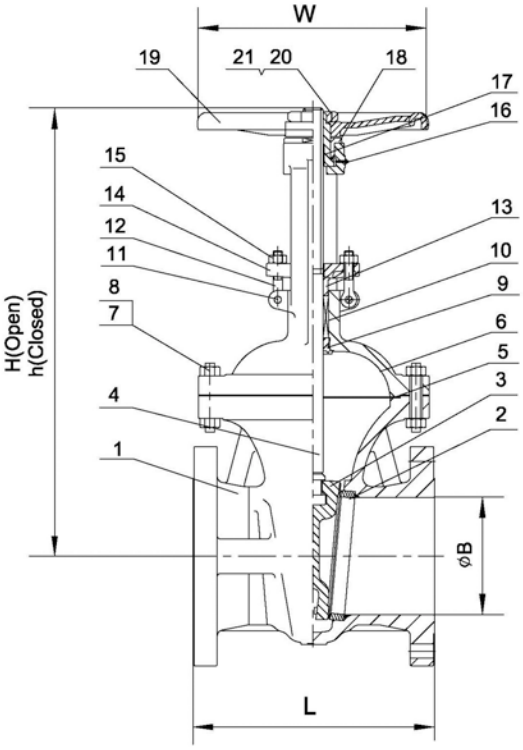

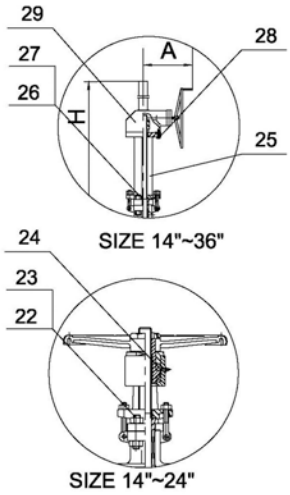

MATERIAL LIST

NO.	Part Name	ASTM Specification (Specs – Grades/Types)				
		A 216	A 352	A 217		A 351
		WCB	LCC	WC6	C5	CF8M
1	Body	A 216-WCB	A 352-LCC	A217-WC6	A 217-C5	A 351-CF8M
2	Seat Ring	A 105, LF2, 316, or 304				
	Seat Ring Surface	13CR, HF (CoCr-A), 316, 304, or Monel				
3	Gate	A 216 – WCB	A 352-LCC	A217-WC6	A 217-C5	A 351-CF8M
	Gate Seating Surface	13CR, HF (CoCr-A), 316, 304, or Monel				
4	Stem	13CR, 316, 304, 17-4PH, or Monel				
5	Gasket	Spiralwound Graphite/ Stainless Steel				
6	Bonnet	A 216 – WCB	A 352-LCC	A217-WC6	A 217-C5	A 351-CF8M
7	Bonnet Bolt Nut	A 194-2H	A 194-4	A 194-2H	A 194-4	A 194-8
8	Bonnet Bolt	A 193-B7	A 320-L7	A 193-B7	A 193-B16	A 193-B8
9	Bonnet Bushing	13CR, 316, or 304				
10	Packing	Braided Graphite & Die Formed Graphite Ring				
11	Eye Bolt Pins	Carbon Steel				A 276 Type 316
12	Gland Eye Bolts	A 193-B7	A 320-L7	A 193-B7		A 193-B8
13	Gland	13CR, 316, or 304				
14	Gland Flange	A 216 – WCB	A 352-LCC	A217-WC6	A 217-C5	A 351-CF8M
15	Eye Bolt Nut	A 194-2H	A 194-7	A 194-2H		A 194-8
16	Grease Nipple	Carbon Steel				A 276 Type 316
17	Yoke Sleeve	A 439 Gr. D2C				
18	Retaining Nut	Carbon Steel				A 276 Type 316
19	Handwheel	Malleable Iron				
20	Handwheel Nut	Carbon Steel				A 276 Type 316
21	Screw	Carbon Steel				
22	Yoke Pad Bolts	A 193-B7				A 276 Type 316
23	Yoke Pad Bolt Nuts	A 194-2H				A 276 Type 316
24	Bearing	Carbon Steel				
25	Yoke	A 216 – WCB	A 352-LCC	A217-WC6	A 217-C5	A 351-CF8M
26	Yoke Pad Bolt	A 193-B7	A 320-L7	A 193-B7	A 193-B16	A 193-B8
27	Yoke Pad Bolt Nuts	A 194-2H	A 194-4	A 194-2H	A 194-4	A 194-8
28	Stud	Carbon Steel				
29	Gear	Carbon Steel				

DIMENSIONS AND WEIGHTS

Size	NPS	2	2-1/2	3	4	5	6	8	10	12	14	16	18	20	24	26	28	30
L (RF)	In	8.50	9.50	11.12	12.00	15.00	15.88	16.50	18.00	19.75	30.00	33.00	36.00	39.00	45.00	49.00	53.00	55.00
	Mm	216	241	283	305	381	403	419	457	502	762	838	914	991	1143	1244	1346	1397
L (RTJ)	In	9.12	10.12	11.75	12.62	15.62	16.50	17.12	18.62	20.37	30.62	33.62	36.62	39.75	45.88	49.88	53.88	56.00
	Mm	232	257	298	321	397	419	435	473	518	778	854	930	1010	1165	1266	1368	1422
L (BW)	In	8.50	9.50	11.12	12.00	15.00	15.88	16.50	18.00	19.75	30.00	33.00	36.00	39.00	45.00	49.00	53.00	55.00
	Mm	216	241	283	305	381	403	419	457	502	762	838	914	991	1143	1244	1346	1397
A	In								9.45	9.45	14.17	14.17	14.17	16.18	16.18	23.62	23.62	23.62
	Mm								240.0	240.0	360.0	360.0	360.0	411.0	411.0	600.0	600.0	600.0
ØB	In	2	3	3	4	5	6	8	10	12	13	15	17	19	23	25	27	29
	Mm	51	64	76	102	127	152	203	254	305	337	387	483	489	591	641	692	743
H	In	16.70	18.10	21.00	24.20	26.10	31.30	39.90	48.50	57.00	64.80	72.50	76.50	84.80	100.50	108.30	122.10	130.70
	Mm	424	460	535	615	662	795	1012	1231	1450	1645	1841	1943	2154	2553	2750	3100	3320
W	In	8	10	10	10	12	14	16	18	20	22	25	25	28	28	28*	35*	35*
	Mm	200	250	250	250	300	350	400	450	500	560	640	640	720	720	720*	900*	900*
WT	KG	24	44	52	76	94	146	218	352	472	694	1080	1235	1655	2498	3100	3893.0	4930.0
	LB	52.9	97.00	114.6	167.5	207.2	321.9	480.6	776.0	1040.6	1530.0	2381.0	2722.7	3648.6	5507	6834.3	8582.5	10868.7

*GEAR OPERATOR RECOMMENDED

Copyright 2015

Gate Valve
Class 600

Standards:
Face to Face Dimensions: ASME B16.10
End Flange Dimensions: ASME B16.5
26" ≥MSS SP-44
Or ASME B16.47
Basic Design: API 600
Test Standard: API 598

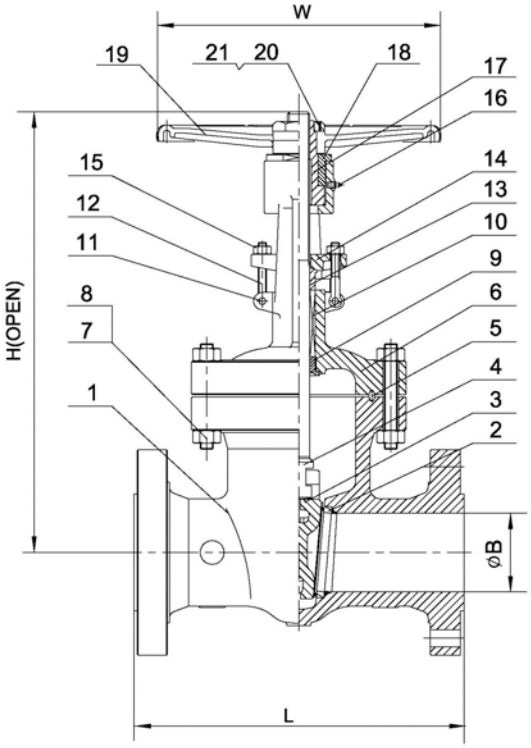

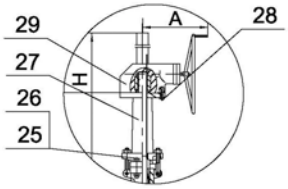

SIZE 12"~36"

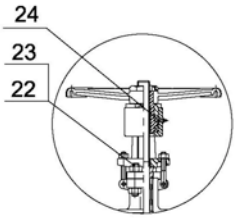

SIZE 8"~12"

MATERIAL LIST

NO.	Part Name	ASTM Specification (Specs – Grades/Types)				
		A 216	A 352	A 217		A 351
		WCB	LCC	WC6	C5	CF8M
1	Body	A 216-WCB	A 352-LCC	A217-WC6	A 217-C5	A 351-CF8M
2	Seat Ring	A 105, LF2, 316, or 304				
	Seat Ring Surface	13CR, HF (CoCr-A), 316, 304, or Monel				
3	Gate	A 216 – WCB	A 352-LCC	A217-WC6	A 217-C5	A 351-CF8M
	Gate Seating Surface	13CR, HF (CoCr-A), 316, 304, or Monel				
4	Stem	13CR, 316, 304, 17-4PH, or Monel				
5	Gasket	Ring Joint Gasket				
6	Bonnet	A 216 – WCB	A 352-LCC	A217-WC6	A 217-C5	A 351-CF8M
7	Bonnet Bolt Nut	A 194-2H	A 194-4	A 194-2H	A 194-4	A 194-8
8	Bonnet Bolt	A 193-B7	A 320-L7	A 193-B7	A 193-B16	A 193-B8
9	Bonnet Bushing	13CR, 316, or 304				
10	Packing	Braided Graphite & Die Formed Graphite Ring				
11	Eye Bolt Pins	Carbon Steel				A 276 Type 316
12	Gland Eye Bolts	A 193-B7	A 320-L7	A 193-B7		A 193-B8
13	Gland	13CR, 316, or 304				
14	Gland Flange	A 216 – WCB	A 352-LCC	A217-WC6	A 217-C5	A 351-CF8M
15	Eye Bolt Nut	A 194-2H	A 194-7	A 194-2H		A 194-8
16	Grease Nipple	Carbon Steel				A 276 Type 316
17	Yoke Sleeve	A 439 Gr. D2C				
18	Retaining Nut	Carbon Steel				A 276 Type 316
19	Handwheel	Malleable Iron				
20	Handwheel Nut	Carbon Steel				A 276 Type 316
21	Screw	Carbon Steel				
22	Yoke Pad Bolts	A 193-B7				A 276 Type 316
23	Yoke Pad Bolt Nuts	A 194-2H				A 276 Type 316
24	Bearing	Carbon Steel				
25	Yoke	A 216 – WCB	A 352-LCC	A217-WC6	A 217-C5	A 351-CF8M
26	Yoke Pad Bolt	A 193-B7	A 320-L7	A 193-B7	A 193-B16	A 193-B8
27	Yoke Pad Bolt Nuts	A 194-2H	A 194-4	A 194-2H	A 194-4	A 194-8
28	Stud	Carbon Steel				
29	Gear	Carbon Steel				

DIMENSIONS AND WEIGHTS

Size	NPS	2	2-1/2	3	4	5	6	8	10	12	14	16	18	20
L (RF)	In	11.50	13.00	14.00	17.00	20.00	22.00	26.00	31.00	33.00	35.00	39.00	43.00	47.00
	Mm	292	330	356	432	508	559	660	787	838	889	991	1092	1194
L (RTJ)	In	11.62	13.12	14.12	17.12	20.12	22.12	26.12	31.12	33.12	35.12	39.12	43.12	47.25
	Mm	295	333	359	435	511	562	663	790	841	892	994	1095	1200
L (BW)	In	11.50	13.00	14.00	17.00	20.00	22.00	26.00	31.00	33.00	35.00	39.00	43.00	47.00
	Mm	292	330	356	432	508	559	660	787	838	889	991	1092	1194
A	In									16.18	19.69	19.69	19.69	19.69
	Mm									411	500	500	500	500
ØB	In	2.01	2.52	2.99	4.02	5.00	5.98	7.87	9.76	11.73	12.87	14.76	16.50	18.27
	Mm	51	64	76	102	127	152	200	248	298	327	375	419	464
H	In	20.16	22.12	24.75	29.80	30.12	38.98	52.17	58.39	68.66	69.56	75.75	80.94	89.96
	Mm	512	562	629	757	765	990	1325	1483	1744	1767	1924	2056	2285
W	In	10	10	12	14	16	18	20	25	25	28*	28*	35*	44*
	Mm	250	250	300	350	400	450	500	640	640	720*	720*	900*	1120*
WT	KG	46	55	72	107	128	266	419	754	981	1316	1672	2070	2405
	LB	101	121	159	236	282	586	924	1662	2463	2901	3686	4564	5302

*GEAR OPERATOR RECOMMENDED

Copyright 2015

Gate Valve
Class 900

Standards:
Face to Face Dimensions: ASME B16.10
End Flange Dimensions: ASME B16.5
26" ≥MSS SP-44
Or ASME B16.47
Basic Design: API 600
Test Standard: API 598

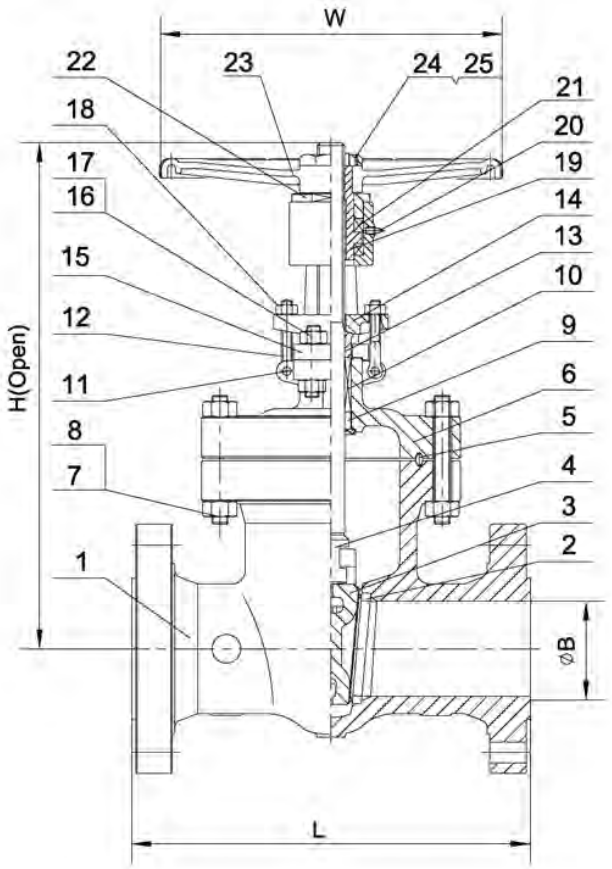

MATERIAL LIST						
NO.	Part Name	ASTM Specification (Specs – Grades/Types)				
		A 216	A 352	A 217		A 351
		WCB	LCC	WC6	C5	CF8M
1	Body	A 216-WCB	A 352-LCC	A217-WC6	A 217-C5	A 351-CF8M
2	Seat Ring	A 105, LF2, 316, or 304				
	Seat Ring Surface	13CR, HF (CoCr-A), 316, 304, or Monel				
3	Gate	A 216-WCB	A 352-LCC	A217-WC6	A 217-C5	A 351-CF8M
	Gate Seating Surface	13CR, HF (CoCr-A), 316, 304, or Monel				
4	Stem	13CR, 316, 304, 17-4PH, or Monel				
5	Gasket	Ring Joint Gasket				
6	Bonnet	A 216-WCB	A 352-LCC	A217-WC6	A 217-C5	A 351-CF8M
7	Bonnet Bolt Nut	A 194-2H	A 194-4	A 194-2H	A 194-4	A 194-8
8	Bonnet Bolt	A 193-B7	A 320-L7	A 193-B7	A 193-B16	A 193-B8
9	Bonnet Bushing	13CR, 316, or 304				
10	Packing	Braided Graphite & Die Formed Graphite Ring				
11	Eye Bolt Pins	Carbon Steel				A 276 Type 316
12	Gland Eye Bolts	A 193-B7	A 320-L7	A 193-B7		A 193-B8
13	Gland	13CR, 316, or 304				
14	Gland Flange	A 216-WCB	A 352-LCC	A217-WC6	A 217-C5	A 351-CF8M
15	Yoke	A 216-WCB	A 352-LCC	A217-WC6	A 217-C5	A 351-CF8M
16	Yoke Pad Bolt	A 193-B7	A 320-L7	A 193-B7	A 193-B16	A 193-B8
17	Yoke Pad Bolt Nuts	A 194-2H	A 194-4	A 194-2H	A 194-4	A 194-8
18	Eye Bolt Nutt	A 194-2H	A 194-4	A 194-2H	A 194-4	A 194-8
19	Yoke Sleeve	ASTM A439 Gr. D2C				
20	Grease Nipple	Carbon Steel				
21	Bearing	Carbon Steel				
22	Retaining Nut	Carbon Steel				316
23	Handwheel	Malleable Iron				
24	Screw	Carbon Steel				
25	Handwheel Nut	Carbon Steel				316

DIMENSIONS AND WEIGHTS										
Size	NPS	2	2-1/2	3	4	6	8	10	12	14
L (RF)	In	14.50	16.50	15.00	18.00	24.00	29.00	33.00	38.00	40.50
	Mm	368	419	381	457	610	737	838	965	1029
L (RTJ)	In	14.60	16.60	15.10	18.10	24.10	29.10	33.10	38.10	40.90
	Mm	371	422	384	460	613	740	841	968	1038
L (BW)	In	14.50	16.50	15.00	18.00	24.00	29.00	33.00	38.00	40.50
	Mm	368	419	381	457	610	737	838	965	1029
ØB	In	1.90	2.20	2.90	3.90	5.70	7.50	9.40	11.10	12.20
	Mm	47	57	73	98	146	190	238	282	311
H	In	14.50	27.80	27.40	32.50	42.00	52.00	60.60	72.50	79.70
	Mm	614	705	656	688	936	1127	1437	1507	2025
W	In	10	12	12	14	20	20	24	28	GO
	Mm	250	300	300	350	500	500	600	720	GO
WT	KG	95	108	125	192	378	635	900	1550	2170
	LB	209.4	238.1	275.6	423.3	833.3	1399.9	1984.1	3417.1	4784.0

Copyright 2015

Gate Valve
Class 1500

Standards:
Face to Face Dimensions: ASME B16.10
End Flange Dimensions: ASME B16.5
26" ≥MSS SP-44
Or ASME B16.47
Basic Design: API 600
Test Standard: API 598

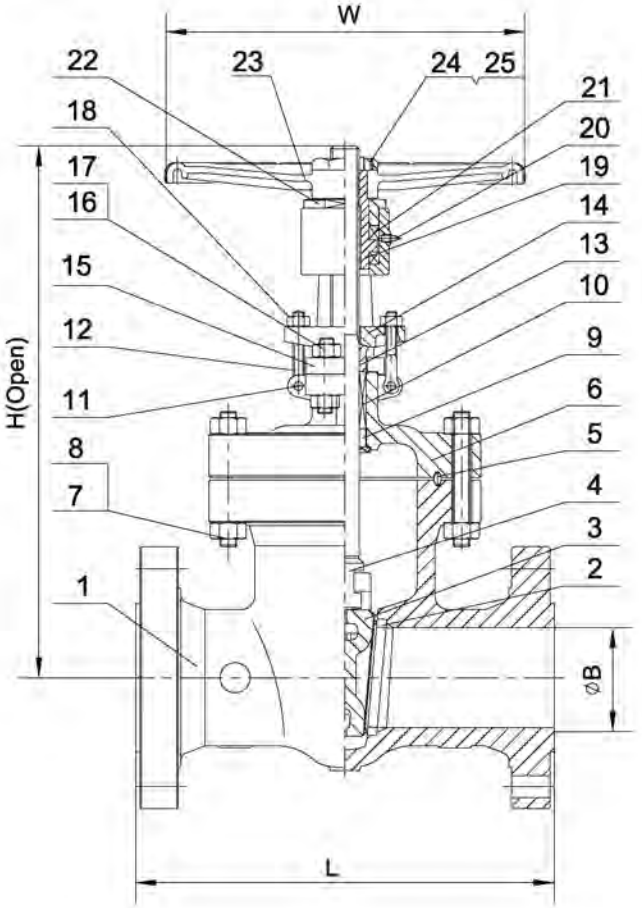

MATERIAL LIST						
NO.	Part Name	ASTM Specification (Specs – Grades/Types)				
		A 216	A 352	A 217		A 351
		WCB	LCC	WC6	C5	CF8M
1	Body	A 216-WCB	A 352-LCC	A217-WC6	A 217-C5	A 351-CF8M
2	Seat Ring	A 105, LF2, 316, or 304				
	Seat Ring Surface	13CR, HF (CoCr-A), 316, 304, or Monel				
3	Gate	A 216-WCB	A 352-LCC	A217-WC6	A 217-C5	A 351-CF8M
	Gate Seating Surface	13CR, HF (CoCr-A), 316, 304, or Monel				
4	Stem	13CR, 316, 304, 17-4PH, or Monel				
5	Gasket	Ring Joint Gasket				
6	Bonnet	A 216-WCB	A 352-LCC	A217-WC6	A 217-C5	A 351-CF8M
7	Bonnet Bolt Nut	A 194-2H	A 194-4	A 194-2H	A 194-4	A 194-8
8	Bonnet Bolt	A 193-B7	A 320-L7	A 193-B7	A 193-B16	A 193-B8
9	Bonnet Bushing	13CR, 316, or 304				
10	Packing	Braided Graphite & Die Formed Graphite Ring				
11	Eye Bolt Pins	Carbon Steel				A 276 Type 316
12	Gland Eye Bolts	A 193-B7	A 320-L7	A 193-B7		A 193-B8
13	Gland	13CR, 316, or 304				
14	Gland Flange	A 216-WCB	A 352-LCC	A217-WC6	A 217-C5	A 351-CF8M
15	Yoke	A 216-WCB	A 352-LCC	A217-WC6	A 217-C5	A 351-CF8M
16	Yoke Pad Bolt	A 193-B7	A 320-L7	A 193-B7	A 193-B16	A 193-B8
17	Yoke Pad Bolt Nuts	A 194-2H	A 194-4	A 194-2H	A 194-4	A 194-8
18	Eye Bolt Nutt	A 194-2H	A 194-4	A 194-2H	A 194-4	A 194-8
19	Yoke Sleeve	ASTM A439 Gr. D2C				
20	Grease Nipple	Carbon Steel				
21	Bearing	Carbon Steel				
22	Retaining Nut	Carbon Steel				316
23	Handwheel	Malleable Iron				
24	Screw	Carbon Steel				
25	Handwheel Nut	Carbon Steel				316

DIMENSIONS AND WEIGHTS										
Size	NPS	2	2-1/2	3	4	6	8	10	12	14
L (RF)	In	14.50	16.50	18.50	21.50	27.80	32.80	39.00	44.50	49.50
	mm	368	419	470	546	705	832	991	1130	1257
L (RTJ)	In	14.63	16.63	18.63	21.63	28.00	33.13	39.38	45.13	50.25
	mm	371	422	473	549	711	841	1000	1146	1276
L (BW)	In	14.50	16.50	18.50	21.50	27.80	32.80	39.00	44.50	49.50
	mm	368	419	470	546	705	832	991	1130	1257
ØB	In	2.00	2.50	2.75	3.62	5.37	5.04	9.40	11.30	12.40
	mm	51	64	70	92	136	128	239	287	315
H	In	24.17	26.81	26.81	27.64	37.44	44.76	56.57	60.12	78.15
	mm	614	681	681	702	951	1137	1437	1527	1985
W	In	12	12	14	20	22	28	33	44	GO
	mm	300	300	350	500	560	720	850	1120	GO
WT	KG	95	142	168	277	545	1180	2118	3244	3693
	LB	209.4	313.1	370.4	610.7	1201.5	2601.4	4669.3	7151.7	8141.6

Copyright 2015

BERIC DAVIS COMPANIES INTERNATIONAL, LTD.

Connecting Business Worldwide!

GLOBE VALVE:

API-600
ANSI Class: 150 - 1500 Size: 2" - 20"
For information on sizes larger than the ones shown on the cut sheets, please contact Beric -Davis.
Material & Specification:
ASTM A216 WCB
Outside Yoke and Bushing
Bolted Bonnet
Welded Seats 13Chrome Hard Faced with Stellite (API No.8)
Hand Wheel Operated

BERIC®
Genuine

OTHER SPECIFICATIONS AVAILABLE:
Materials: WCB, WC6, WC9, C5, C12, LCB, LCC, CF8M, CF3, CF3M, CN7M, and other High Temperature Alloys
End Connections: Butt Weld, Raised Face, Ring Type Joint
Seats: Removable or Welded
Packing: Standard - Flexible Graphite & Braided
Standard Trim: Trim 5, 8, 11, 12

(713) 673-2073 – Fax (713) 673-4641 - Toll Free (866) GO-BERIC (462-3742)
www.bericvalves.com

Globe Valve
Class 150

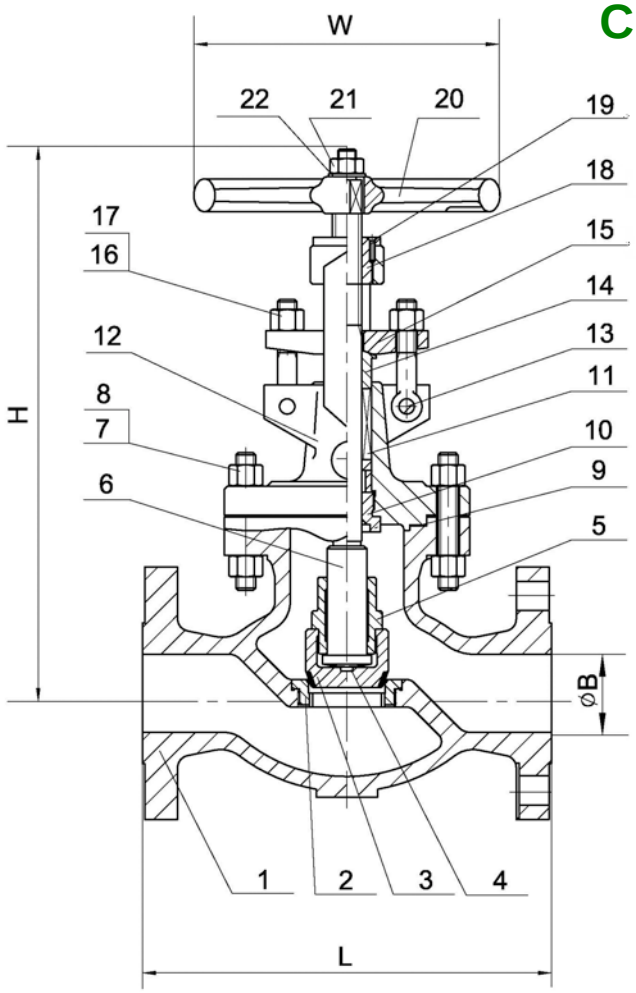

Standards:

Face to Face Dimensions: ANSI B16.10
End Flange Dimensions: ANSI B16.5
Basic Design: ASME B16.34
Wall Thickness Per: API-600
Test Standard: API 598

MATERIAL LIST

NO.	Part Name	ASTM Specification (Specs – Grades/Types)				
		A 216	A 352	A 217		A 351
		WCB	LCC	WC6	C5	CF8M
1	Body	A 216-WCB	A 352-LCC	A217-WC6	A 217-C5	A 351-CF8M
2	Seat Ring	A 105, LF2, 316, or 304				
	Seat Ring Surface	13CR, HF (CoCr-A), 316, 304, or Monel				
3	Disc	A 216 – WCB	A 352-LCC	A217-WC6	A 217-C5	A 351-CF8M
	Disc Seating Surface	13CR, HF (CoCr-A), 316, 304, or Monel				
4	Disc Thrust Plate	13CR, 316, OR 304				
5	Disc Nut	13CR, 316, OR 304				
6	Stem	13CR, 316, 304, 17-4PH, or Monel				
7	Bonnet Bolt Nut	A 194-2H	A 194-4	A 194-2H	A 194-4	A 194-8
8	Bonnet Bolt	A 193-B7	A 320-L7	A 193-B7	A 193-B16	A 193-B8
9	Gasket	Spiral Wound 316/Graphite				
10	Bonnet Bushing	13CR, 316, OR 304				
11	Gland Packing	Braided Graphite & Die Formed Graphite Ring				
12	Bonnet	A 216-WCB	A 352-LCC	A217-WC6	A 217-C5	A 351-CF8M
13	Eye Bolt Pins	13CR, 316, or 304				
14	Gland	13CR, 316, or 304				
15	Gland Flange	A 216-WCB	A 352-LCC	A217-WC6	A 217-C5	A 351-CF8M
16	Gland Eye Bolts	A 193-B7	A 320-L7	A 193-B7	A 193-B16	A 193-B8
17	Eye Bolt Nuts	A 194-2H	A 194-4	A 194-2H	A 194-4	A 194-8
18	Yoke Sleeve	ASTM A 439 Gr. D2C				
19	Screw	Carbon Steel				A 276-316
20	Handwheel	Malleable Iron				
21	Handwheel Nut	Carbon Steel				A 276-316
22	Backing Ring	Carbon Steel				A 276-316

DIMENSIONS AND WEIGHTS

Size	NPS	2	2-1/2	3	4	5	6	8	10	12	14	16	18	20
L (RF)	In	8.00	8.50	9.50	11.50	14.00	16.00	19.50	24.50	27.50	31.00	36.00	38.50	38.50
	Mm	203	216	241	292	356	406	495	622	698	787	914	978	978
L (RTJ)	In	8.50	9.00	10.00	12.00	14.50	16.50	20.00	25.00	28.00	31.50	36.50	38.90	38.98
	Mm	216	229	254	305	368	419	508	635	711	800	927	990	990
L (BW)	In	8.00	8.50	9.50	11.50	14.00	16.00	19.50	24.50	27.50	31.00	36.00	38.50	38.50
	Mm	203	216	241	292	356	406	495	622	699	787	914	978	978
ØB	In	2	2.50	3	4	5	6	8	10	12	13.25	15.25	17.25	19.25
	Mm	51	64	76	102	127	152	203	254	305	337	387	438	489
H	In	16.12	17.00	17.68	19.68	21.19	21.62	24.43	30.00	33.88	56.00	64.00	71.18	79.64
	Mm	410	432	450	500	538	550	620	762	860	1442	1625	1820	2023
W	In	8	10	10	12	12	14	16	18	22	22	25	GO	GO
	Mm	200	250	250	300	300	350	400	450	560	560	640	GO	GO
WT	KG	22	30	42	60	77	101	161	308	410	610	880	1150	1650
	LB	48.5	66	92.6	132	170	223	355	679	904	1345	1940	2535	3638

Copyright 2015

Globe Valve
Class 300

Standards:

Face to Face Dimensions: ANSI B16.10
End Flange Dimensions: ANSI B16.5
Basic Design: ASME B16.34
Wall Thickness Per: API-600
Test Standard: API 598

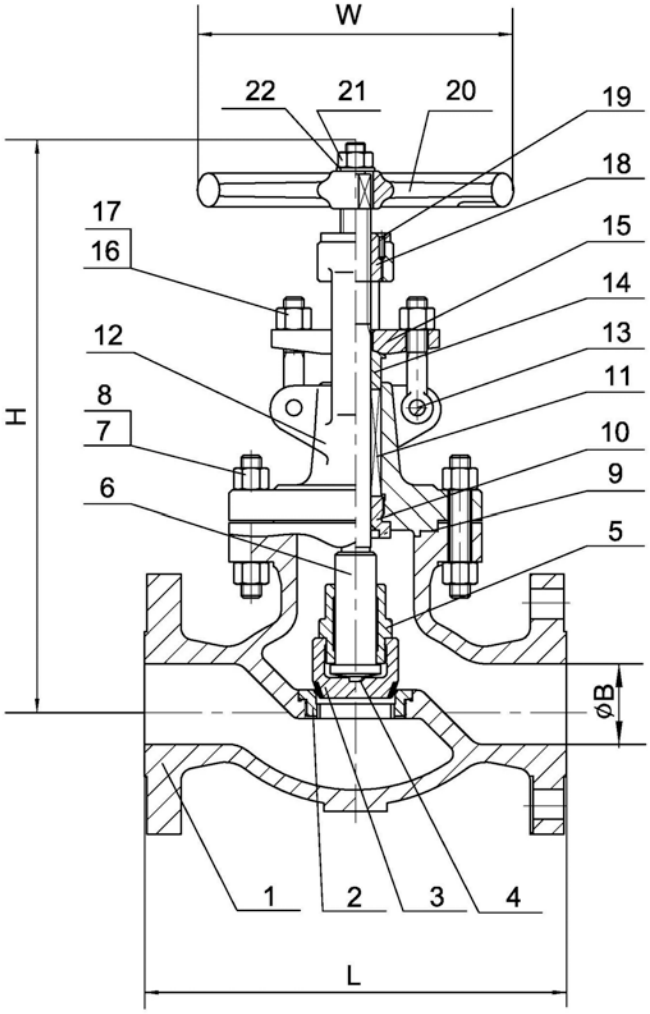

MATERIAL LIST						
NO.	Part Name	ASTM Specification (Specs – Grades/Types)				
		A 216	A 352	A 217		A 351
		WCB	LCC	WC6	C5	CF8M
1	Body	A 216-WCB	A 352-LCC	A217-WC6	A 217-C5	A 351-CF8M
2	Seat Ring	A 105, LF2, 316, or 304				
	Seat Ring Surface	13CR, HF (CoCr-A), 316, 304, or Monel				
3	Disc	A 216 – WCB	A 352-LCC	A217-WC6	A 217-C5	A 351-CF8M
	Disc Seating Surface	13CR, HF (CoCr-A), 316, 304, or Monel				
4	Disc Thrust Plate	13CR, 316, OR 304				
5	Disc Nut	13CR, 316, OR 304				
6	Stem	13CR, 316, 304, 17-4PH, or Monel				
7	Bonnet Bolt Nut	A 194-2H	A 194-4	A 194-2H	A 194-4	A 194-8
8	Bonnet Bolt	A 193-B7	A 320-L7	A 193-B7	A 193-B16	A 193-B8
9	Gasket	Spiral Wound 316/Graphite				
10	Bonnet Bushing	13CR, 316, OR 304				
11	Gland Packing	Braided Graphite & Die Formed Graphite Ring				
12	Bonnet	A 216-WCB	A 352-LCC	A217-WC6	A 217-C5	A 351-CF8M
13	Eye Bolt Pins	13CR, 316, or 304				
14	Gland	13CR, 316, or 304				
15	Gland Flange	A 216-WCB	A 352-LCC	A217-WC6	A 217-C5	A 351-CF8M
16	Gland Eye Bolts	A 193-B7	A 320-L7	A 193-B7	A 193-B16	A 193-B8
17	Eye Bolt Nuts	A 194-2H	A 194-4	A 194-2H	A 194-4	A 194-8
18	Yoke Sleeve	ASTM A 439 Gr. D2C				
19	Screw	Carbon Steel				A 276-316
20	Handwheel	Malleable Iron				
21	Handwheel Nut	Carbon Steel				A 276-316
22	Backing Ring	Carbon Steel				A 276-316

DIMENSIONS AND WEIGHTS												
Size	NPS	2	2-1/2	3	4	5	6	8	10	12	14	16
L (RF)	In	10.50	11.50	12.50	14.00	15.75	17.50	22.00	24.50	28.00	33.00	34.00
	Mm	267	292	318	356	400	444	559	622	711	838	864
L (RTJ)	In	11.13	12.13	13.13	14.63	16.38	18.13	22.63	25.13	28.63	33.62	34.61
	Mm	283	308	333	371	416	460	575	638	727	854	879
L (BW)	In	10.50	11.50	12.50	14.00	15.75	17.50	22.00	24.50	28.00	33.00	34.00
	Mm	267	292	318	356	400	444	559	622	711	838	864
ØB	In	2.00	2.50	3.00	4.00	5.00	6.00	8.00	10.00	12.00	11.37	15.25
	Mm	51	64	76	102	127	152	203	254	305	337	387
H	In	16.56	17.13	17.68	20.50	24.38	25.56	31.50	41.00	44.88	50.59	56.30
	Mm	420	435	450	520	620	650	800	1040	1140	1285	1430
W	In	8	10	10	12	14	16	20	22	22	25	25
	Mm	200	250	250	300	350	400	500	560	560	640	640
WT	KG	31	40	58	86	130	150	397	527	608	630	880
	LB	68	88	128	190	287	331	875	1162	1340	1389	1940

Copyright 2015

Globe Valve

Class 600

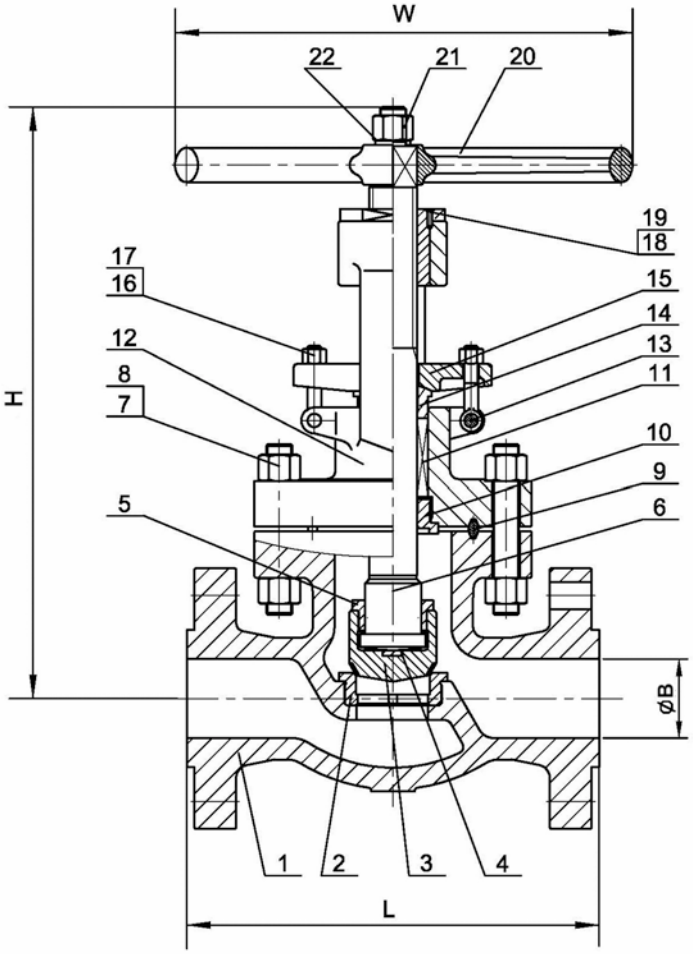

MATERIAL LIST						
NO.	Part Name	ASTM Specification (Specs – Grades/Types)				
		A 216	A 352	A 217		A 351
		WCB	LCC	WC6	C5	CF8M
1	Body	A 216-WCB	A 352-LCC	A217-WC6	A 217-C5	A 351-CF8M
2	Seat Ring	A 105, LF2, 316, or 304				
	Seat Ring Surface	13CR, HF (CoCr-A), 316, 304, or Monel				
3	Disc	A 216 – WCB	A 352-LCC	A217-WC6	A 217-C5	A 351-CF8M
	Disc Seating Surface	13CR, HF (CoCr-A), 316, 304, or Monel				
4	Disc Thrust Plate	13CR, 316, OR 304				
5	Disc Nut	13CR, 316, OR 304				
6	Stem	13CR, 316, 304, 17-4PH, or Monel				
7	Bonnet Bolt Nut	A 194-2H	A 194-4	A 194-2H	A 194-4	A 194-8
8	Bonnet Bolt	A 193-B7	A 320-L7	A 193-B7	A 193-B16	A 193-B8
9	Gasket	Ring Joint - Iron				
10	Bonnet Bushing	13CR, 316, OR 304				
11	Gland Packing	Braided Graphite & Die Formed Graphite Ring				
12	Bonnet	A 216-WCB	A 352-LCC	A217-WC6	A 217-C5	A 351-CF8M
13	Eye Bolt Pins	13CR, 316, or 304				
14	Gland	13CR, 316, or 304				
15	Gland Flange	A 216-WCB	A 352-LCC	A217-WC6	A 217-C5	A 351-CF8M
16	Gland Eye Bolts	A 193-B7	A 320-L7	A 193-B7	A 193-B16	A 193-B8
17	Eye Bolt Nuts	A 194-2H	A 194-4	A 194-2H	A 194-4	A 194-8
18	Yoke Sleeve	ASTM A 439 Gr. D2C				
19	Screw	Carbon Steel				A 276-316
20	Handwheel	Malleable Iron				
21	Handwheel Nut	Carbon Steel				A 276-316
22	Backing Ring	Carbon Steel				A 276-316

Standards:

Face to Face Dimensions: ANSI B16.10
End Flange Dimensions: ANSI B16.5
Basic Design: ASME B16.34
Wall Thickness Per: API-600
Test Standard: API 598

DIMENSIONS AND WEIGHTS												
Size	NPS	2	2-1/2	3	4	6	8	10	12	14	16	18
L (RF)	In	11.50	13.00	14.00	17.00	22.00	26.00	31.00	33.00	35.00	39.00	43.00
	Mm	292	330	356	432	559	660	787	838	889	991	1092
L (RTJ)	In	11.63	13.13	14.13	17.13	22.13	26.13	31.13	33.13	35.13	39.13	43.13
	Mm	295	333	359	435	562	664	791	842	892	994	1096
L (BW)	In	11.50	13.00	14.00	17.00	22.00	26.00	31.00	33.00	35.00	39.00	43.00
	Mm	292	330	356	432	559	660	787	838	889	991	1092
ØB	In	2.00	2.50	3.00	4.00	6.00	7.87	9.75	11.75	12.87	15.25	17.25
	Mm	51	64	76	102	152	200	248	298	327	387	438
H	In	15.00	18.00	19.00	22.00	34.00	37.00	40.00	43.00	47.00	54.00	58.00
	Mm	390	445	495	570	870	940	1010	1100	1200	1371	1473
W	In	10	12	14	16	20	22	25	28	32	32	32
	Mm	250	300	350	400	500	560	640	700	810	810	810
WT	KG	57	73	89	149	417	542	700	900	1200	1450	1820
	LB	126	161	196	328	919	1195	1543	1984	2645	3197	4012

Copyright 2015

Globe Valve
Class 900

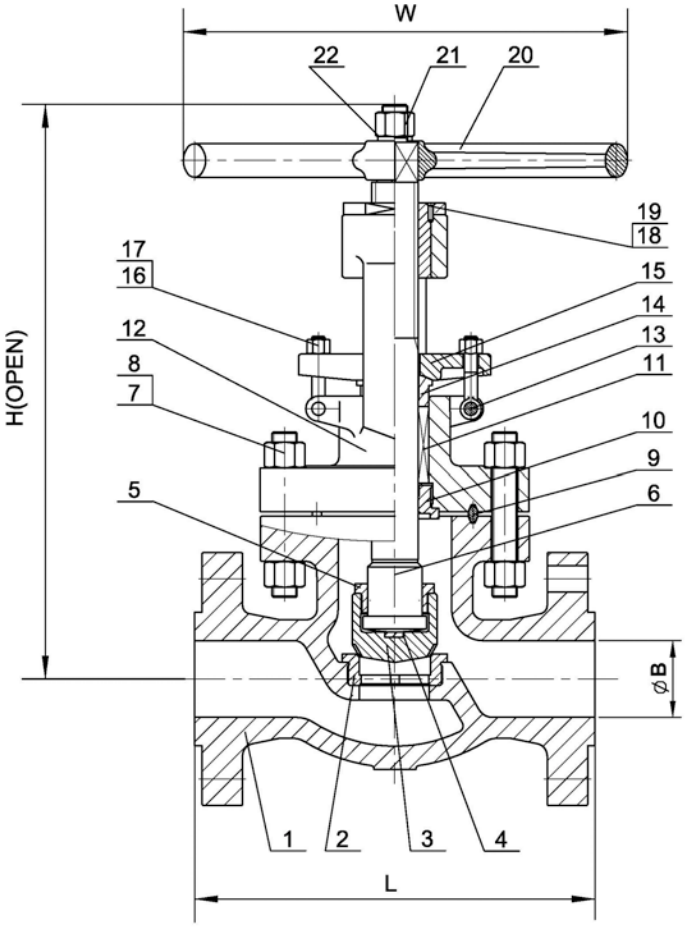

MATERIAL LIST						
NO.	Part Name	ASTM Specification (Specs – Grades/Types)				
		A 216	A 352	A 217		A 351
		WCB	LCC	WC6	C5	CF8M
1	Body	A 216-WCB	A 352-LCC	A217-WC6	A 217-C5	A 351-CF8M
2	Seat Ring	A 105, LF2, 316, or 304				
	Seat Ring Surface	13CR, HF (CoCr-A), 316, 304, or Monel				
3	Disc	A 216 – WCB	A 352-LCC	A217-WC6	A 217-C5	A 351-CF8M
	Disc Seating Surface	13CR, HF (CoCr-A), 316, 304, or Monel				
4	Disc Thrust Plate	13CR, 316, OR 304				
5	Disc Nut	13CR, 316, OR 304				
6	Stem	13CR, 316, 304, 17-4PH, or Monel				
7	Bonnet Bolt Nut	A 194-2H	A 194-4	A 194-2H	A 194-4	A 194-8
8	Bonnet Bolt	A 193-B7	A 320-L7	A 193-B7	A 193-B16	A 193-B8
9	Gasket	Ring Joint - Iron				
10	Bonnet Bushing	13CR, 316, OR 304				
11	Gland Packing	Braided Graphite & Die Formed Graphite Ring				
12	Bonnet	A 216-WCB	A 352-LCC	A217-WC6	A 217-C5	A 351-CF8M
13	Eye Bolt Pins	13CR, 316, or 304				
14	Gland	13CR, 316, or 304				
15	Gland Flange	A 216-WCB	A 352-LCC	A217-WC6	A 217-C5	A 351-CF8M
16	Gland Eye Bolts	A 193-B7	A 320-L7	A 193-B7	A 193-B16	A 193-B8
17	Eye Bolt Nuts	A 194-2H	A 194-4	A 194-2H	A 194-4	A 194-8
18	Yoke Sleeve	ASTM A 439 Gr. D2C				
19	Screw	Carbon Steel				A 276-316
20	Handwheel	Malleable Iron				
21	Handwheel Nut	Carbon Steel				A 276-316
22	Backing Ring	Carbon Steel				A 276-316

Standards:

Face to Face Dimensions: ANSI B16.10
End Flange Dimensions: ANSI B16.5
Basic Design: ASME B16.34
Wall Thickness Per: API-600
Test Standard: API 598

DIMENSIONS AND WEIGHTS									
Size	NPS	2	2-1/2	3	4	6	8	10	12
L (RF)	In	14.50	16.50	15.00	18.00	24.00	29.00	33.00	38.00
	Mm	368	419	381	457	610	737	838	965
L (RTJ)	In	14.63	16.63	15.13	18.13	24.13	29.13	33.15	38.11
	Mm	371	422	384	460	613	740	842	968
L (BW)	In	14.50	16.50	15.00	18.00	24.00	29.00	33.00	38.00
	Mm	368	419	381	457	610	737	838	965
ØB	In	1.87	2.25	2.87	3.89	5.75	7.50	9.38	11.12
	Mm	48	57	73	99	146	190	238	292
H	In	22.63	26.00	28.13	31.50	40.00	45.13	50.31	55.55
	Mm	600	660	665	800	1015	1145	1278	1411
W	In	14	16	16	18	22	25	25	28
	Mm	350	400	400	450	560	640	640	720
WT	KG	87	130	122	182	434	730	1231	1568
	LB	192	287	269	401	957	1609	2714	3457

Copyright 2015

Globe Valve
Class 1500

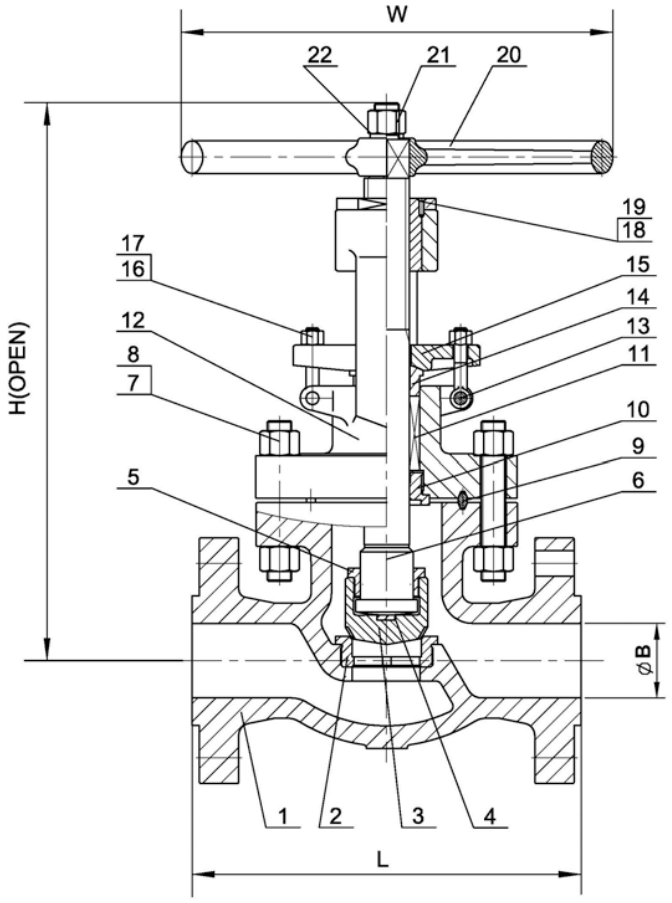

MATERIAL LIST						
NO.	Part Name	ASTM Specification (Specs – Grades/Types)				
		A 216	A 352	A 217		A 351
		WCB	LCC	WC6	C5	CF8M
1	Body	A 216-WCB	A 352-LCC	A217-WC6	A 217-C5	A 351-CF8M
2	Seat Ring	A 105, LF2, 316, or 304				
	Seat Ring Surface	13CR, HF (CoCr-A), 316, 304, or Monel				
3	Disc	A 216 – WCB	A 352-LCC	A217-WC6	A 217-C5	A 351-CF8M
	Disc Seating Surface	13CR, HF (CoCr-A), 316, 304, or Monel				
4	Disc Thrust Plate	13CR, 316, OR 304				
5	Disc Nut	13CR, 316, OR 304				
6	Stem	13CR, 316, 304, 17-4PH, or Monel				
7	Bonnet Bolt Nut	A 194-2H	A 194-4	A 194-2H	A 194-4	A 194-8
8	Bonnet Bolt	A 193-B7	A 320-L7	A 193-B7	A 193-B16	A 193-B8
9	Gasket	Ring Joint - Iron				
10	Bonnet Bushing	13CR, 316, OR 304				
11	Gland Packing	Braided Graphite & Die Formed Graphite Ring				
12	Bonnet	A 216-WCB	A 352-LCC	A217-WC6	A 217-C5	A 351-CF8M
13	Eye Bolt Pins	13CR, 316, or 304				
14	Gland	13CR, 316, or 304				
15	Gland Flange	A 216-WCB	A 352-LCC	A217-WC6	A 217-C5	A 351-CF8M
16	Gland Eye Bolts	A 193-B7	A 320-L7	A 193-B7	A 193-B16	A 193-B8
17	Eye Bolt Nuts	A 194-2H	A 194-4	A 194-2H	A 194-4	A 194-8
18	Yoke Sleeve	ASTM A 439 Gr. D2C				
19	Screw	Carbon Steel				A 276-316
20	Handwheel	Malleable Iron				
21	Handwheel Nut	Carbon Steel				A 276-316
22	Backing Ring	Carbon Steel				A 276-316

Standards:

Face to Face Dimensions: ANSI B16.10
End Flange Dimensions: ANSI B16.5
Basic Design: ASME B16.34
Wall Thickness Per: API-600
Test Standard: API 598

DIMENSIONS AND WEIGHTS									
Size	NPS	2	2-1/2	3	4	6	8	10	12
L (RF)	In	14.50	16.50	18.50	21.50	27.75	32.75	39.00	44.50
	Mm	368	419	470	546	705	832	991	1130
L (RTJ)	In	14.63	16.63	18.63	21.63	27.87	33.12	39.13	44.63
	Mm	371	422	473	549	711	841	994	1133
L (BW)	In	14.50	16.50	18.50	21.50	27.75	32.75	39.00	44.50
	Mm	368	419	470	546	705	832	991	1130
ØB	In	1.87	1.63	1.87	3.62	4.56	7.00	7.75	9.75
	Mm	48	41.3	47.6	92	136	178	197	250
H	In	21.50	23.20	28.00	28.25	35.04	48.82	65.00	73.62
	Mm	546	589	711	718	890	1240	1651	1870
W	In	14	14	14	16	25	32	34	36
	Mm	350	350	350	400	640	800	850	900
WT	KG	87	168	250	435	540	970	1520	1960
	LB	192	370	551	959	1190	2138	3351	4321

Copyright 2015

BERIC DAVIS COMPANIES INTERNATIONAL, LTD.

Connecting Business Worldwide!

BERIC®

Genuine

CHECK VALVE:

API-600
ANSI Class: 150 - 1500 Size: 2" - 36"
For information on sizes larger than the ones shown on the cut sheets, please contact Beric -Davis.
Material & Specification:
ASTM A216 WCB
Bolted Cover
Welded Seats 13Chrome Hard Faced with Stellite (API No.8)

OTHER SPECIFICATIONS AVAILABLE:
Materials: WCB, WC6, WC9, C5, C12, LCB, LCC, CF8M, CF3, CF3M, CN7M, and other High Temperature Alloys
End Connections: Butt Weld, Raised Face, Ring Type Joint
Seats: Removable or Welded
Packing: Standard - Flexible Graphite & Braided
Standard Trim: Trim 5, 8, 11, 12

(713) 673-2073 – Fax (713) 673-4641 - Toll Free (866) GO-BERIC (462-3742)
www.bericvalves.com

Check Valve
Class 150

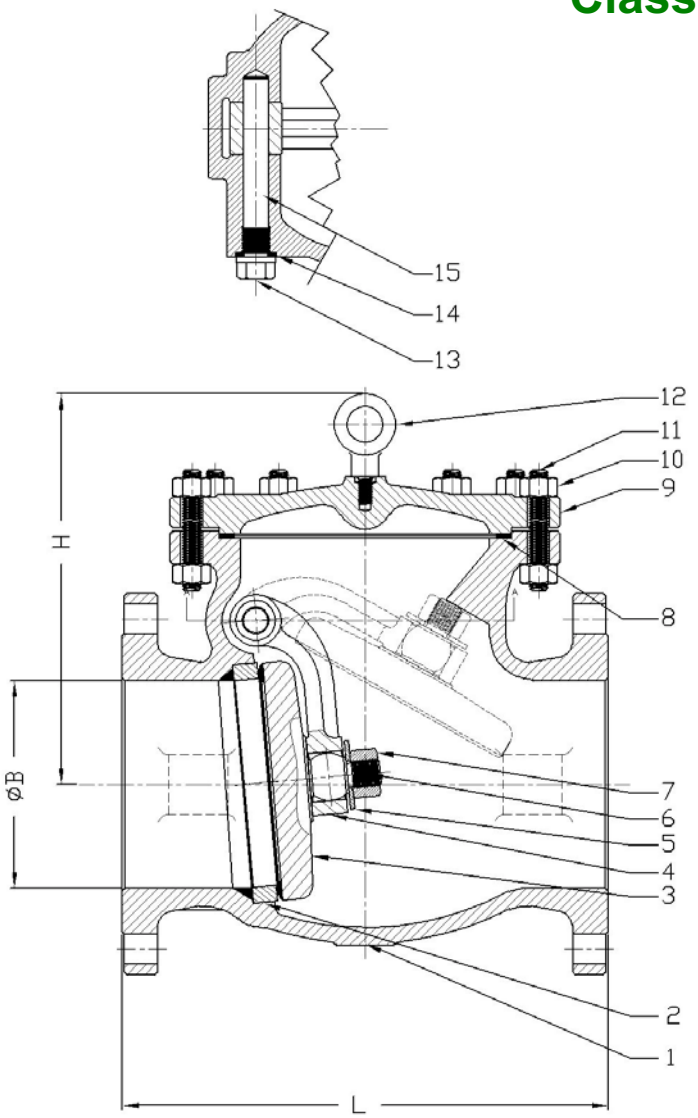

Standards:

Face to Face Dimensions:	ANSI B16.10
End Flange Dimensions:	ANSI B16.5
Basic Design:	ANSI B16.34
Wall Thickness Per:	API-600
Test Standard:	API 598

MATERIAL LIST

NO.	Part Name	ASTM Specification (Specs – Grades/Types)				
		A 216	A 352	A 217		A 351
		WCB	LCC	WC6	WC5	CF8M
1	Body	A216-WCB	A352-LCC	A217-WC6	A217-C5	A351-CF8M
2	Seat Ring	A105	A350-LF2	A182-F11	A182-F11	
	Seat Ring Surface	13CR, HF (CoCr-A), 316, 304, or Monel				
3	Disc	A105	A350-LF2	A182-F11	A182-F11	A182-316
	Disc Seating Surface	13CR, HF (CoCr-A), 316, 304, or Monel				
4	Swing Arm	A 216-WCB	A 352-LCC	A217-WC6	A 217-WC5	A 351-CF8M
5	Washer	ASTM A276 Gr. 316				
6	Pin	ASTM A276 Gr. 316				
7	Disc Nut	A194 Gr. 8				
8	Gasket	F5				
9	Bonnet	A216-WCB	A352-LCC	A217-WC6	A217-C5	A351-CF8M
10	Body Nut	A 193-B7	A 320-L7	A 193-B7	A 193-B16	A 193-B8
11	Body Stud	A 193-B7	A 320-L7	A 193-B7	A 193-B16	A 193-B8
12	Eyebolt	A181				
13	Hinge Pin Bolt	A 193-B7	A 320-L7	A 193-B7	A 193-B16	A 193-B8
14	Gasket	08F				
15	Hinge Pin	A276-410	A276-410	A276-410	A276-410	A276-316

DIMENSIONS AND WEIGHTS

Size	NPS	2	2-1/2	3	4	5	6	8	10	12	14	16	18	20	24
L (RF)	In	8.00	8.50	9.50	11.50	13.00	14.00	19.50	24.50	27.50	31.00	34.00	38.50	38.50	51.00
	Mm	203	216	241	292	330	356	495	622	698	787	864	978	978	1295
L RTJ)	In	8.50	9.00	10.00	12.00	13.50	14.50	20.00	25.00	28.00	31.50	34.50	38.90	38.98	51.50
	Mm	216	229	254	305	343	368	508	635	711	800	876	990	990	1308
L (BW)	In	8.00	8.50	9.50	11.50	13.00	14.00	19.50	24.50	27.50	31.00	34.00	38.50	38.50	51.00
	Mm	203	216	241	292	330	356	495	622	698	787	864	978	978	1295
ØB	In	2	2.50	3	4	5	6	8	10	12	13.25	15.25	17.25	19.25	23.25
	Mm	51	64	76	102	127	152	203	254	305	337	387	438	489	591
H	In	6.50	7.00	7.30	8.50	9.06	10.50	12.50	14.50	16.00	17.00	19.00	23.60	26.00	29.10
	Mm	165	178	186	217	230	266	318	368	406	432	483	600	660	740
WT	KG	19	26	29	48	69	77	133	266	347	451	556	784	835	1580
	LB	42	57	64	106	152	170	293	586	765	994	1226	1728	1841	3483

COPYRIGHT 2015

Check Valve
Class 300

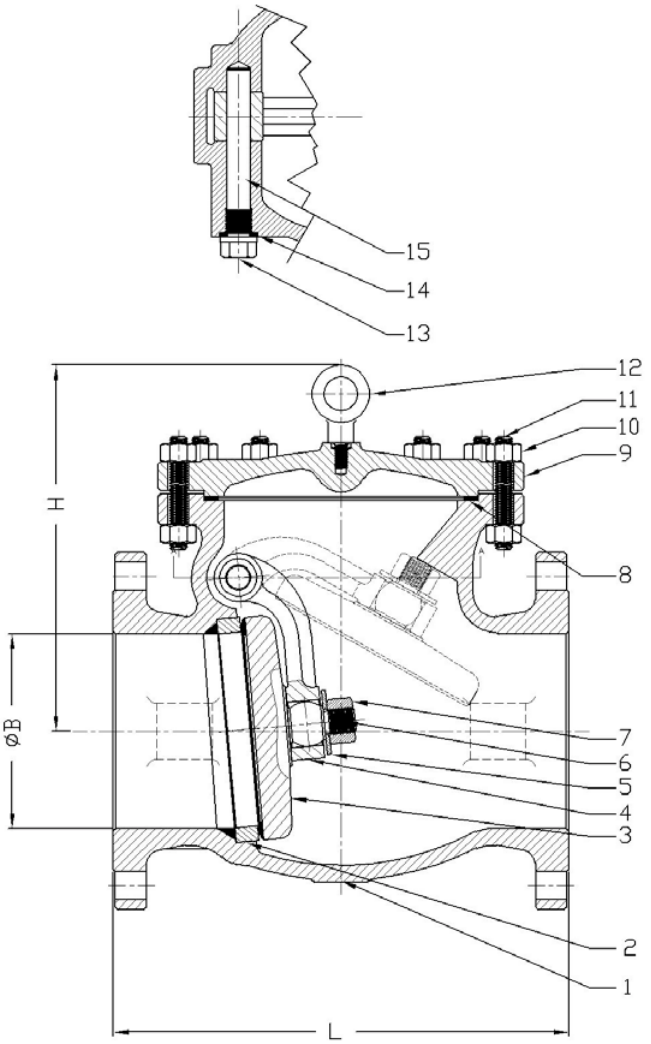

Standards:

Face to Face Dimensions:	ANSI B16.10
End Flange Dimensions:	ANSI B16.5 26" ≥ MSS SP-44 Or ASME B16.47
Basic Design:	ANSI B16.34
Wall Thickness Per:	API-600
Test Standard:	API 598

MATERIAL LIST

NO.	Part Name	ASTM Specification (Specs – Grades/Types)				
		A 216	A 352	A 217		A 351
		WCB	LCC	WC6	WC5	CF8M
1	Body	A216-WCB	A352-LCC	A217-WC6	A217-C5	A351-CF8M
2	Seat Ring	A105	A350-LF2	A182-F11	A182-F11	
	Seat Ring Surface	13CR, HF (CoCr-A), 316, 304, or Monel				
3	Disc	A105	A350-LF2	A182-F11	A182-F11	A182-316
	Disc Seating Surface	13CR, HF (CoCr-A), 316, 304, or Monel				
4	Swing Arm	A 216-WCB	A 352-LCC	A217-WC6	A 217-WC5	A 351-CF8M
5	Washer	ASTM A276 Gr. 316				
6	Pin	ASTM A276 Gr. 316				
7	Disc Nut	A194 Gr. 8				
8	Gasket	F5				
9	Bonnet	A216-WCB	A352-LCC	A217-WC6	A217-C5	A351-CF8M
10	Body Nut	A 193-B7	A 320-L7	A 193-B7	A 193-B16	A 193-B8
11	Body Stud	A 193-B7	A 320-L7	A 193-B7	A 193-B16	A 193-B8
12	Eyebolt	A181				
13	Hinge Pin Bolt	A 193-B7	A 320-L7	A 193-B7	A 193-B16	A 193-B8
14	Gasket	08F				
15	Hinge Pin	A276-410	A276-410	A276-410	A276-410	A276-316

DIMENSIONS AND WEIGHTS

Size	NPS	2	2-1/2	3	4	5	6	8	10	12	14	16	18	20	24	30	32	36
L (RF)	In	10.50	11.50	12.50	14.00	15.75	17.50	21.00	24.50	28.00	33.00	34.00	38.50	40.50	53.00	62.80	68.00	82.00
	Mm	267	292	318	356	400	444	533	622	711	838	863	978	1016	1346	1594	1727	2083
L RTJ)	In	11.13	12.13	13.13	14.63	16.38	18.13	21.63	25.13	28.63	33.62	34.61	39.13	40.80	53.80	63.80	69.10	83.10
	Mm	283	308	333	371	416	460	549	638	727	854	879	994	1035	1368	1619	1755	2111
L (BW)	In	10.50	11.50	12.50	14.00	15.75	17.50	21.00	24.50	28.00	33.00	34.00	38.50	40.50	53.00	62.80	68.00	82.00
	Mm	267	292	318	356	400	444	533	622	711	838	863	978	1016	1346	1594	1727	2083
ØB	In	2.00	2.50	3.00	4.00	5.00	6.00	8.00	10.00	12.00	13.25	15.25	17.25	19.25	23.25	29.25	31.25	35.25
	Mm	51	64	76	102	127	152	203	254	305	337	387	432	483	584	735	794	895
H	In	7.00	7.50	8.30	9.70	12.00	12.50	14.00	15.50	19.00	21.00	23.00	23.30	24.20	27.90	34.00	40.00	45.00
	Mm	178	191	211	246	305	318	356	394	482	533	584	590	614	694	977	1016	1143
WT	KG	21	32	43	61	84	131	213	384	449	680	840	1025	1320	1960	3400	3700	4300
	LB	46	70.5	95	134.5	185	289	469.6	846.6	990	1499	1852	2260	2910	4321	7496	8157	9480

COPYRIGHT 2015

Check Valve
Class 600

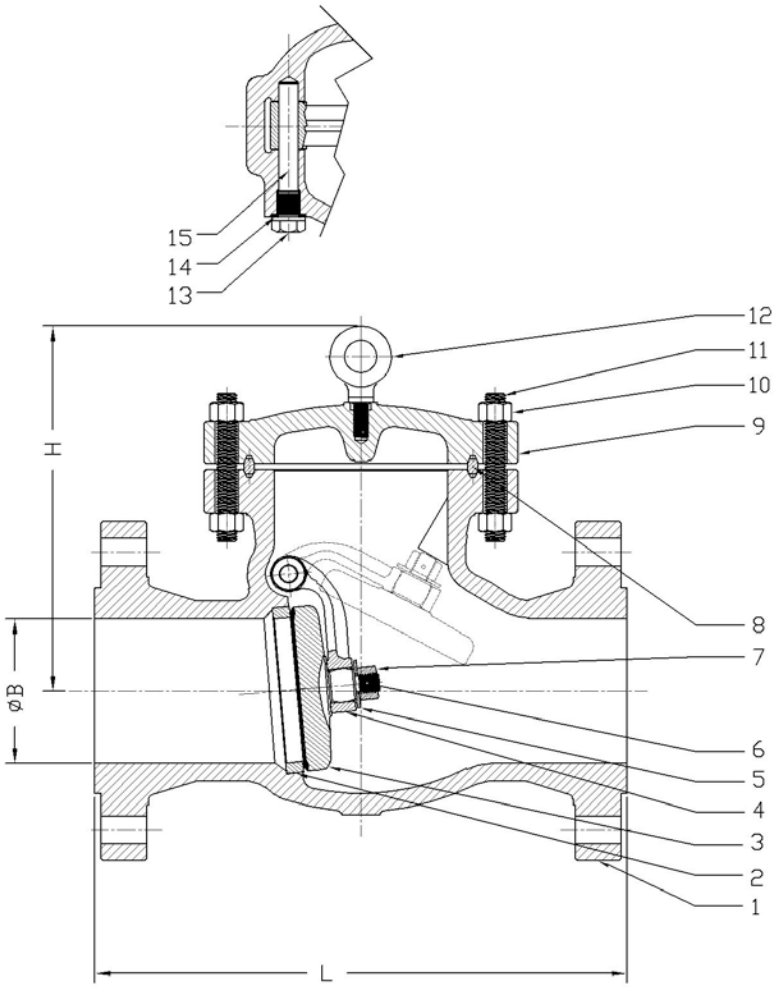

Standards:

Face to Face Dimensions:	ANSI B16.10
End Flange Dimensions:	ANSI B16.5 26" ≥ MSS SP-44 Or ASME B16.47
Basic Design:	ANSI B16.34
Wall Thickness Per:	API-600
Test Standard:	API 598

MATERIAL LIST

NO.	Part Name	ASTM Specification (Specs – Grades/Types)				
		A 216	A 352	A 217		A 351
		WCB	LCC	WC6	WC5	CF8M
1	Body	A216-WCB	A352-LCC	A217-WC6	A217-C5	A351-CF8M
2	Seat Ring	A105	A350-LF2	A182-F11	A182-F11	
	Seat Ring Surface	13CR, HF (CoCr-A), 316, 304, or Monel				
3	Disc	A105	A350-LF2	A182-F11	A182-F11	A182-316
	Disc Seating Surface	13CR, HF (CoCr-A), 316, 304, or Monel				
4	Swing Arm	A 216-WCB	A 352-LCC	A217-WC6	A 217-WC5	A 351-CF8M
5	Washer	ASTM A276 Gr. 316				
6	Pin	ASTM A276 Gr. 316				
7	Disc Nut	A194 Gr. 8				
8	Gasket	F5				
9	Bonnet	A216-WCB	A352-LCC	A217-WC6	A217-C5	A351-CF8M
10	Body Nut	A 193-B7	A 320-L7	A 193-B7	A 193-B16	A 193-B8
11	Body Stud	A 193-B7	A 320-L7	A 193-B7	A 193-B16	A 193-B8
12	Eyebolt	A181				
13	Hinge Pin Bolt	A 193-B7	A 320-L7	A 193-B7	A 193-B16	A 193-B8
14	Gasket	08F				
15	Hinge Pin	A276-410	A276-410	A276-410	A276-410	A276-316

DIMENSIONS AND WEIGHTS

Size	NPS	2	2-1/2	3	4	6	8	10	12	14	16	18	20	24	26	28	30	32	36
L (RF)	In	11.50	13.00	14.00	17.00	22.00	26.00	31.00	33.00	35.00	39.00	43.00	47.00	55.00	57.00	63.00	65.00	70.00	82.00
	Mm	292	330	356	432	559	660	787	838	889	990	1092	1194	1397	1448	1600	1651	1778	2083
L (RTJ)	In	11.63	13.13	14.13	17.13	22.13	26.13	31.13	33.13	35.13	39.13	43.13	47.25	55.38	55.38	63.50	65.50	70.62	82.62
	Mm	295	333	359	435	562	664	791	841	892	994	1096	1200	1407	1407	1613	1664	1794	2099
L (BW)	In	11.50	13.00	14.00	17.00	22.00	26.00	31.00	33.00	35.00	39.00	43.00	47.00	55.00	57.00	63.00	65.00	70.00	82.00
	Mm	292	330	356	432	559	660	787	838	889	990	1092	1194	1397	1448	1600	1651	1778	2083
ØB	In	2.00	2.50	3.00	4.00	6.00	7.87	9.75	11.75	12.87	14.88	17.25	19.25	22.00	25.25	27.25	29.25	31.25	35.25
	Mm	51	64	76	102	152	200	248	298	327	375	438	489	559	641	692	743	794	896
H	In	7.36	8.50	10.94	12.44	15.75	17.01	19.02	20.00	22.52	25.98	28.74	31.50	35.43	40.00	41.97	45.98	48.03	51.97
	Mm	187	216	278	316	400	432	483	508	572	660	730	800	900	1016	1066	1168	1220	1320
WT	KG	52	63	75	122	227	346	628	796	892	1200	1600	2420	3150	3800	4600	5500	6250	7800
	LB	115	139	165	269	500	763	1384.5	1755	1966.5	2645	3527	5335	6944	8377.5	10141	12125	13778	17196

COPYRIGHT 2015

Check Valve
Class 900

Standards:

Face to Face Dimensions:	ANSI B16.10
End Flange Dimensions:	ANSI B16.5
Basic Design:	ANSI B16.34
Wall Thickness Per:	API-600
Test Standard:	API 598

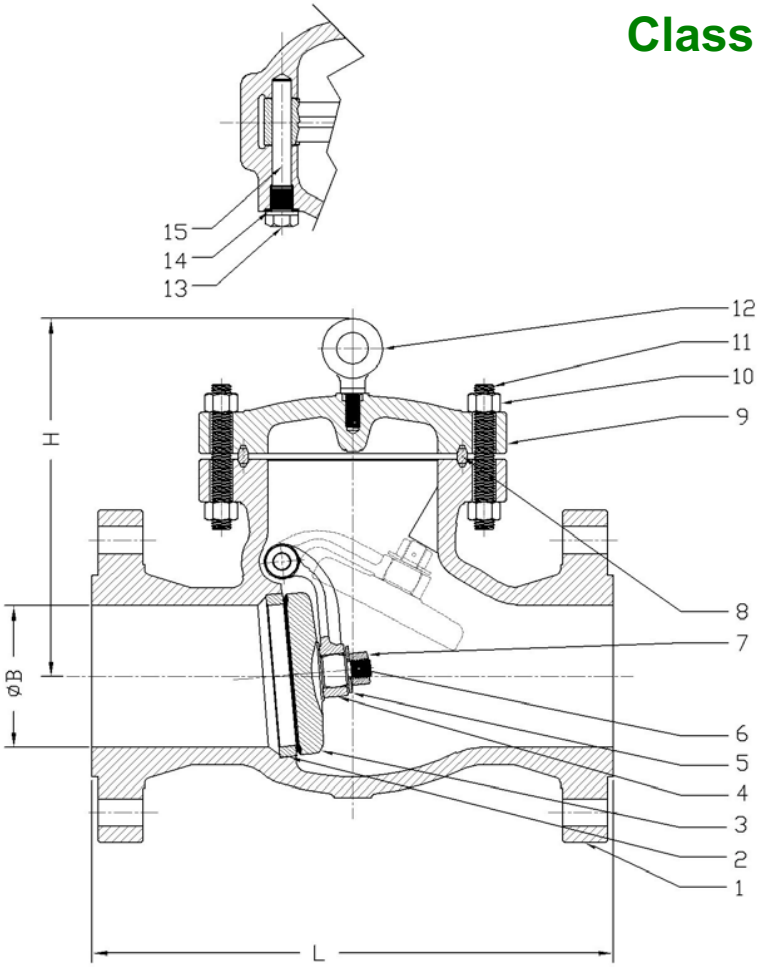

MATERIAL LIST

NO.	Part Name	ASTM Specification (Specs – Grades/Types)				
		A 216	A 352	A 217		A 351
		WCB	LCC	WC6	WC5	CF8M
1	Body	A216-WCB	A352-LCC	A217-WC6	A217-C5	A351-CF8M
2	Seat Ring	A105	A350-LF2	A182-F11	A182-F11	
	Seat Ring Surface	13CR, HF (CoCr-A), 316, 304, or Monel				
3	Disc	A105	A350-LF2	A182-F11	A182-F11	A182-316
	Disc Seating Surface	13CR, HF (CoCr-A), 316, 304, or Monel				
4	Swing Arm	A 216-WCB	A 352-LCC	A217-WC6	A 217-WC5	A 351-CF8M
5	Washer	ASTM A276 Gr. 316				
6	Pin	ASTM A276 Gr. 316				
7	Disc Nut	A194 Gr. 8				
8	Gasket	F5				
9	Bonnet	A216-WCB	A352-LCC	A217-WC6	A217-C5	A351-CF8M
10	Body Nut	A 193-B7	A 320-L7	A 193-B7	A 193-B16	A 193-B8
11	Body Stud	A 193-B7	A 320-L7	A 193-B7	A 193-B16	A 193-B8
12	Eyebolt	A181				
13	Hinge Pin Bolt	A 193-B7	A 320-L7	A 193-B7	A 193-B16	A 193-B8
14	Gasket	08F				
15	Hinge Pin	A276-410	A276-410	A276-410	A276-410	A276-316

DIMENSIONS AND WEIGHTS

Size	NPS	2	2-1/2	3	4	6	8	10	12	14	16
L (RF)	In	14.50	16.50	15.00	18.00	24.00	29.00	33.00	38.00	40.50	44.50
	Mm	368	419	381	457	610	737	838	965	1029	1130
L (RTJ)	In	14.63	16.63	15.13	18.13	24.13	29.13	33.13	38.13	40.88	44.88
	Mm	371	422	384	460	613	740	841	968	1038	1140
L (BW)	In	14.50	16.50	15.00	18.00	24.00	29.00	33.00	38.00	40.50	44.50
	Mm	368	419	381	457	610	737	838	965	1029	1130
ØB	In	1.85	1.92	2.87	3.87	5.75	7.50	9.38	11.12	13.25	15.25
	Mm	47	57	73	98	146	190	238	282	336	388
H	In	9.88	10.60	9.13	12.30	14.30	17.00	18.90	22.00	24.80	27.60
	Mm	250	270	230	310	360	430	480	560	629	700
WT	KG	69	93	85	145	310	500	772	1080	1500	2130
	LB	152	205	187	320	683	1102	1702	2381	3307	4696

COPYRIGHT 2015

Check Valve
Class 1500

Standards:

Face to Face Dimensions:	ANSI B16.10
End Flange Dimensions:	ANSI B16.5
Basic Design:	ANSI B16.34
Wall Thickness Per:	API-600
Test Standard:	API 598

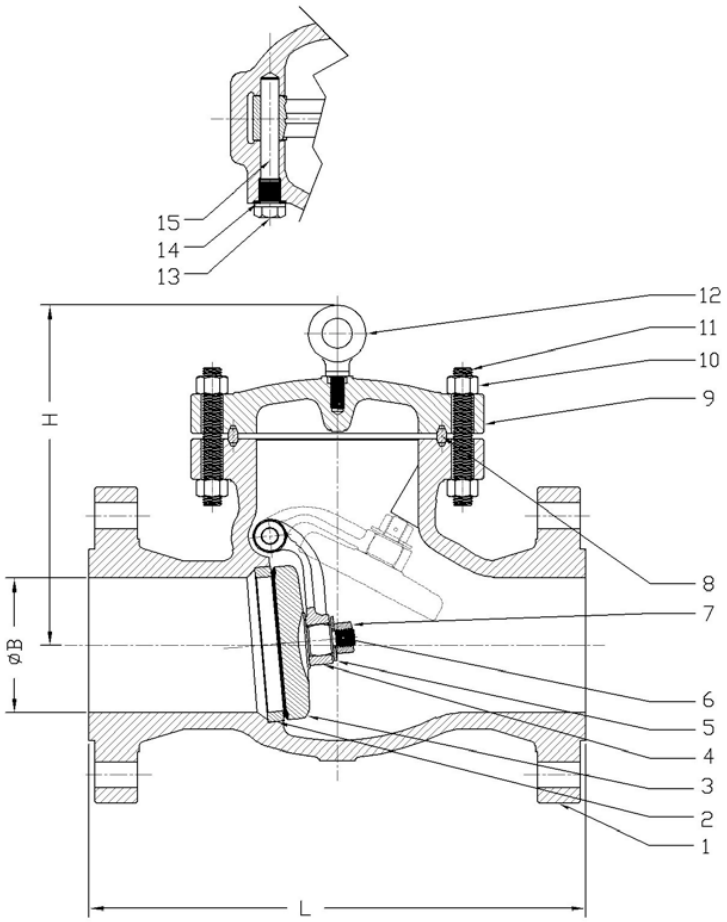

MATERIAL LIST

NO.	Part Name	ASTM Specification (Specs – Grades/Types)				
		A 216	A 352	A 217		A 351
		WCB	LCC	WC6	WC5	CF8M
1	Body	A216-WCB	A352-LCC	A217-WC6	A217-C5	A351-CF8M
2	Seat Ring	A105	A350-LF2	A182-F11	A182-F11	
	Seat Ring Surface	13CR, HF (CoCr-A), 316, 304, or Monel				
3	Disc	A105	A350-LF2	A182-F11	A182-F11	A182-316
	Disc Seating Surface	13CR, HF (CoCr-A), 316, 304, or Monel				
4	Swing Arm	A 216-WCB	A 352-LCC	A217-WC6	A 217-WC5	A 351-CF8M
5	Washer	ASTM A276 Gr. 316				
6	Pin	ASTM A276 Gr. 316				
7	Disc Nut	A194 Gr. 8				
8	Gasket	F5				
9	Bonnet	A216-WCB	A352-LCC	A217-WC6	A217-C5	A351-CF8M
10	Body Nut	A 193-B7	A 320-L7	A 193-B7	A 193-B16	A 193-B8
11	Body Stud	A 193-B7	A 320-L7	A 193-B7	A 193-B16	A 193-B8
12	Eyebolt	A181				
13	Hinge Pin Bolt	A 193-B7	A 320-L7	A 193-B7	A 193-B16	A 193-B8
14	Gasket	08F				
15	Hinge Pin	A276-410	A276-410	A276-410	A276-410	A276-316

DIMENSIONS AND WEIGHTS

Size	NPS	2	2-1/2	3	4	6	8	10	12	14	16
L (RF)	In	14.50	16.50	18.50	21.50	27.75	32.75	39.00	44.50	49.50	54.50
	Mm	368	419	470	546	705	832	991	1130	1257	1384
L (RTJ)	In	14.63	16.63	18.63	21.63	28.00	33.13	39.38	45.13	50.25	55.38
	Mm	371	422	473	549	711	841	1000	1146	1276	1407
L (BW)	In	14.50	16.50	18.50	21.50	27.75	32.75	39.00	44.50	49.50	54.50
	Mm	368	419	470	546	705	832	991	1130	1257	1384
ØB	In	1.85	2.50	2.75	3.62	5.35	7.50	9.50	11.50	13.25	15.25
	Mm	47	64	70	92	136	190	241	292	336	388
H	In	12.25	12.25	13.00	14.00	15.75	20.88	22.06	25.63	30.90	36.61
	Mm	310	310	330	355	400	530	560	650	785	930
WT	KG	69	93	140	232	490	990	1490	1970	2450	3205
	LB	152	205	309	512	1080	2182	3285	4343	5401	7066

COPYRIGHT 2015